Increase energy efficiency – TurbuFlexS

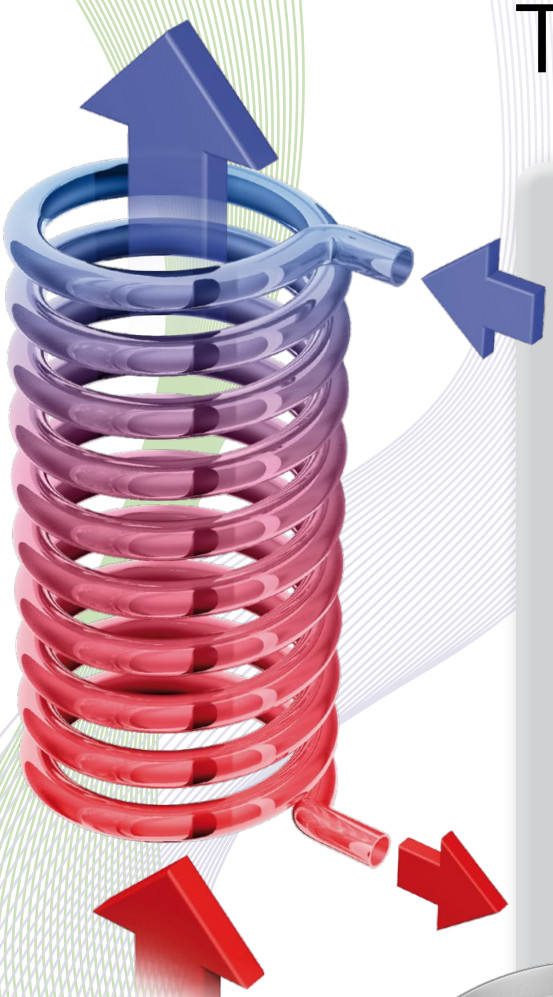

SCHRÄDER
ABGASTECHNOLOGIE

TurbuFlexS

Increase energy efficiency – reduce costs

Enormous amounts of heat are generated in domestic or commercial boilers, combustion plants and industrial processes. The waste heat usually emits through the chimney into the atmosphere.

A portion of the generated energy remains unused and is lost!

The guide plates in the exhaust gas heat exchanger, which can be pivoted alternately from guide plate to guide plate, are deflected depending on the temperature. The hot exhaust gases in the center of the flue gas pipe are transported to the outer areas of the coil.

The exhaust gases penetrate the air gaps of the coil pipe and intensive turbulences occur. The swivel angles of the guide plates are adjusted automatically based on the flue gas temperature:

low temperature = no swivel function

high temperature = strong swivel function

Heat exchangers – The principle of heat recovery

Heat exchangers allow the transfer of heat from a warm medium to a colder medium. Inside the TurbuFlexS heat exchanger the flue gas flow guides along the coil pipes and heats up the water thereby. The bimetallic guide plates which are located inside the coil cavity deflect the hot exhaust gases several times. The heated water increases the boiler return temperature or can supply individual consumers directly with hot water.

Schräder supplies the technology that not only reduces your costs, but also contributes to the reduction of emissions and thus an active environmental protection.

The Guide plate unit is suspended via maintenance opening

- Accessible via large maintenance opening
- Function check without disassembly
- Simple and fast cleaning

Setting of guide plate angle, swivel function

- Four different angle bias adjustment options to adapt different temperature requirements

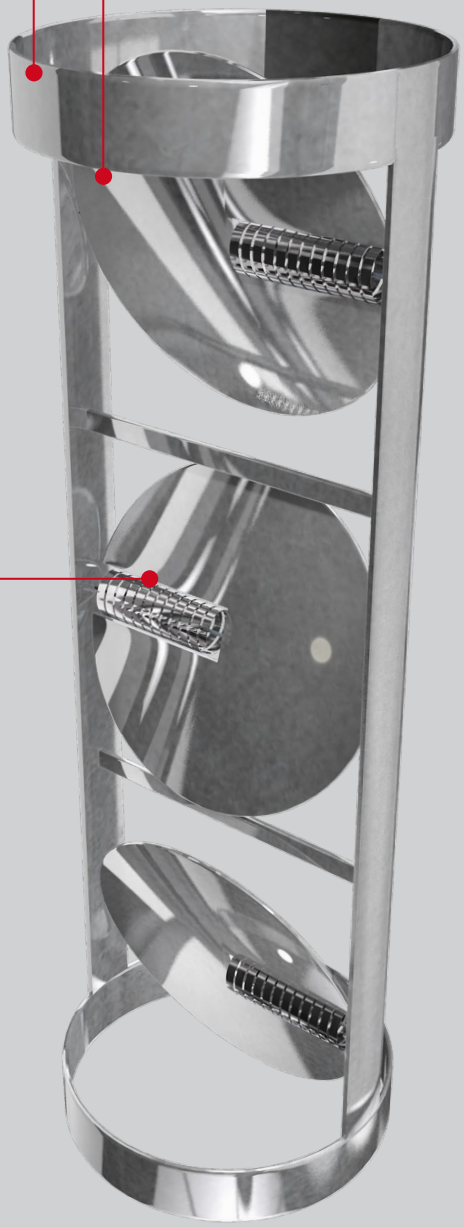

Bimetal coil: sensor and actuator in one

- Max. operating temperature 550° C
- High corrosion resistance due to stainless steel alloys

Your benefit:

- **Reducing costs**
- **Using energy reserves**
- **Protecting the environment**

TurbuFlexS advantages:

- **Hot water in a short time**
- **Universally applicable**
- **For solid, liquid and gaseous fuels**
- **Less space required**
- **Vertical, horizontal or oblique mounting**
- **Low installation effort**
- **For new installations and retrofits**

With natural draught:

- **Better combustion due to longer length of stay of the flue gases in the combustion chamber**
- **Increased comfort due to furnace control function (automatic throttle valve)**

TurbuFlexS Standard boiler return flow boost (example / proposal to explain function)

1. Balancing valve with filling and flushing device with volume flow display l/min
2. Manometer
3. Thermometer
4. Automatic air bleed
5. Safety pressure relief valve
6. Shut-off devices with drain cock: **Attention**, lockable shut-off device in the flow line or the return flow of the heat exchanger
7. Shut-off device
8. Shut-off device for manual adjustment of the flow resistance
9. Three-way mixing valve for return flow temperature increase
10. Circulation pump
11. Diaphragm expansion vessel
12. Thermal discharge safety-valve with drain connection
13. Suck-blower device (vacuum range)

Hose connection

Flow line

Return flow

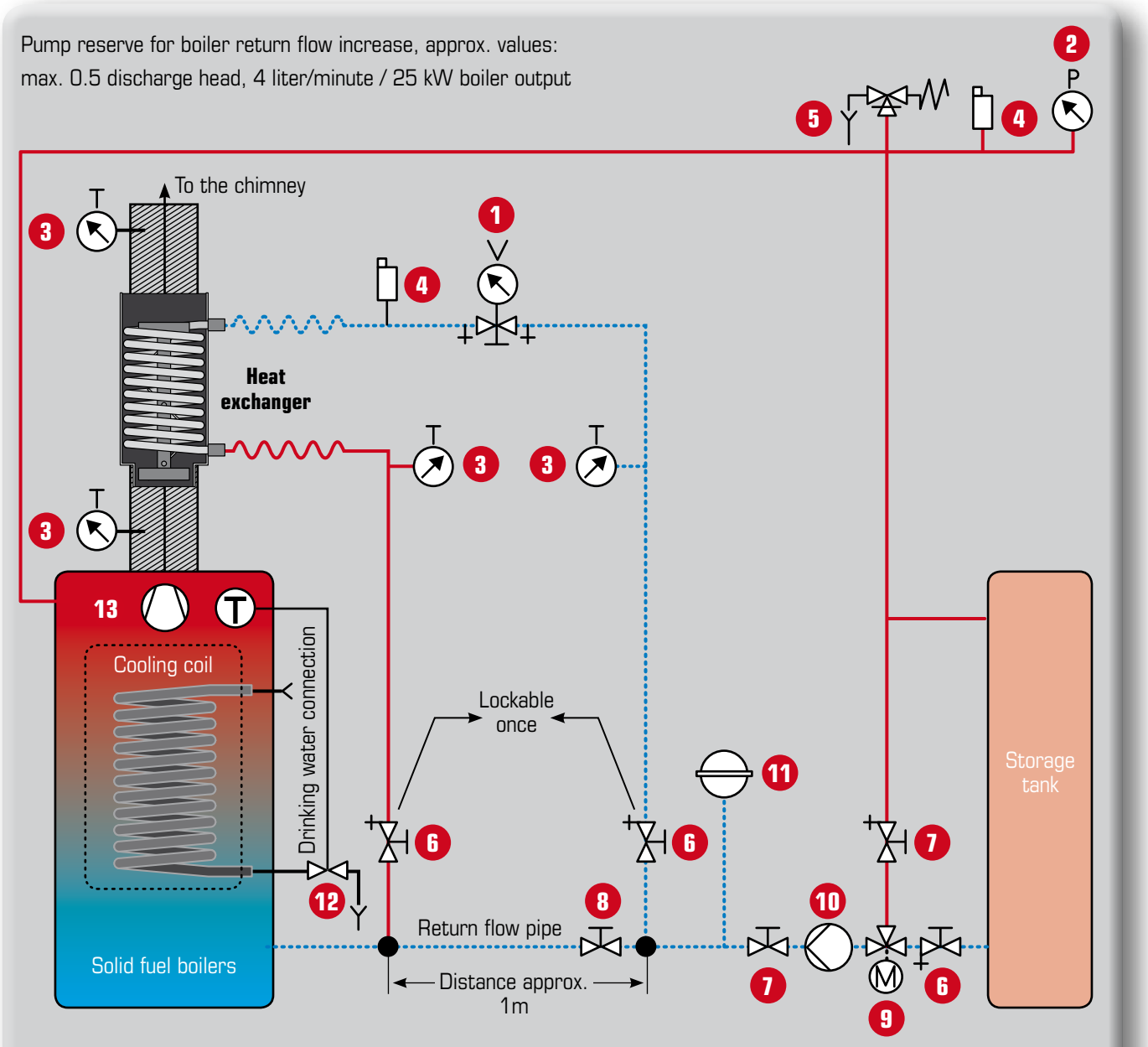

Example / Proposal to be checked for applications

Mounting examples

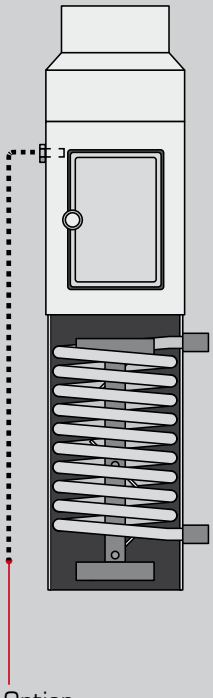

Vertical, horizontal or inclined at a heat source with straight exhaust pipe and large cleaning door

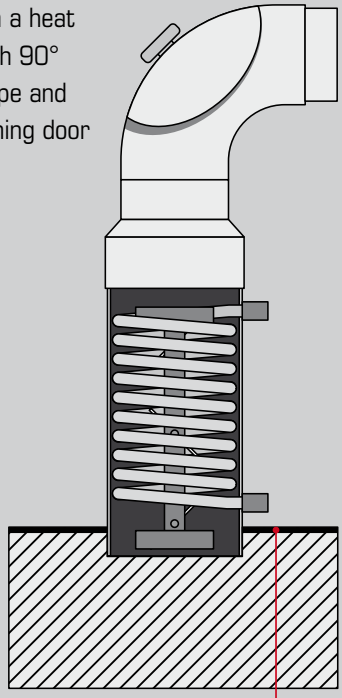

Vertical on a heat source with 90° exhaust pipe and large cleaning door

Examples of heat sources:

Heating boilers with fuels:

wood chips, wood logs, pellets, oil, gas, coal

Firing installations: wood-burning stoves, heating inserts, tiled stoves, hot-air stoves, baking ovens, pizza ovens, drying plants, roasting plants, kitchen blocks, plants for process heat generation

Options:

- Temperature sensor required if pump control TurbuFlex Basic Control is used.
- Connection block for thermal discharge safety-valve (TAS) available on request, if safety cooling is required. (Only nec-essary for single room combus-tion plants without existing safety equipment)

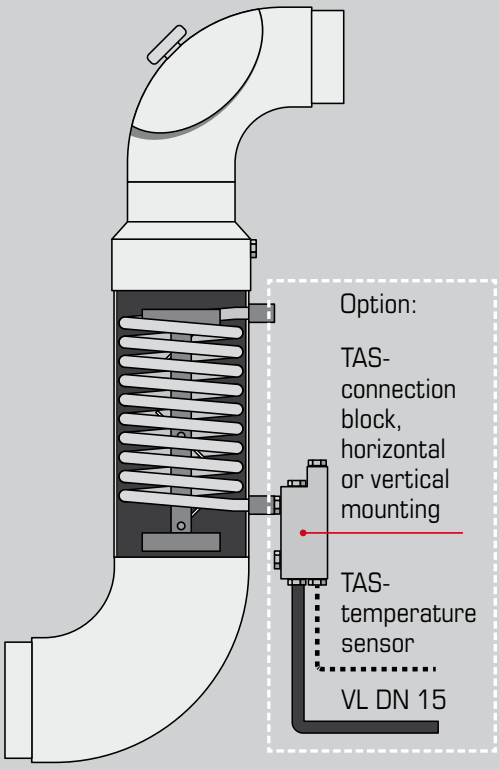

Vertically or obliquely at a heat source with two 90° exhaust pipes and large cleaning door as S-shaped mounting variant

Selection of TurbuFlexS heat exchangers

Realization proposal		Flue gas temperature in C°														
		120	140	160	180	200	220	240	260	280	300	320	340	360	380	400
Firing capacity in kW	10	300	300	600	600	600	600	600	600	600	600	600	600	600	600	600
	20	300	600	600	600	600	600	600	600	600	600	600	600	600	600	600
	30	600	600	600	600	600	600	600	600	600	600	600	600	600	600	600
	40	600	600	600	600	600	600	600	600	900	900	900	900	900	900	900
	50	600	600	600	600	600	600	600	900	900	900	900	900	900	900	900
	60	600	600	600	600	600	600	900	900	900	900	900	900	900	900	900
	70	600	600	600	600	600	900	900	900	900	900	900	900	900	900	Komb.
	80	600	600	600	600	900	900	900	900	900	900	900	900	900	Komb.	Komb.
	90	600	600	600	900	900	900	900	900	900	900	900	900	Komb.	Komb.	Komb.
	100	600	600	900	900	900	900	900	900	900	900	900	Komb.	Komb.	Komb.	Komb.

300 **TurbuFlexS-300** 600 **TurbuFlexS-600** 900 **TurbuFlexS-900** Komb. **Combination**

The three product variants TurbuFlexS-300, TurbuFlexS-600 and TurbuFlexS-900 are available. All have a DN200 stainless steel exhaust pipe with a material thickness of 1.5 mm. The inlet pipe is wide in the standard version and the outlet pipe is narrow so that the exhaust heat exchanger can be installed like a standard exhaust pipe. Several heat exchangers can also be combined in a series or parallel connection. The designs can be flexibly adapted to customer-specific requirements.

The proposed selection of TurbuFlexS heat exchanger types is based on the expected amount of energy that can be extracted from the flue gas. For this purpose, the rated values of furnace output and flue gas temperature are used when entering the heat exchanger. The proposed heat exchanger selection results from the intersection of the selected vertical flue gas temperature line with the horizontal combustion capacity line. A user-specific design of the heat exchanger can be carried out on customer request.

Further information on possible applications, technical solutions, prices and amortization periods is available on request. We will be pleased to make you an attractive offer for your individual application.

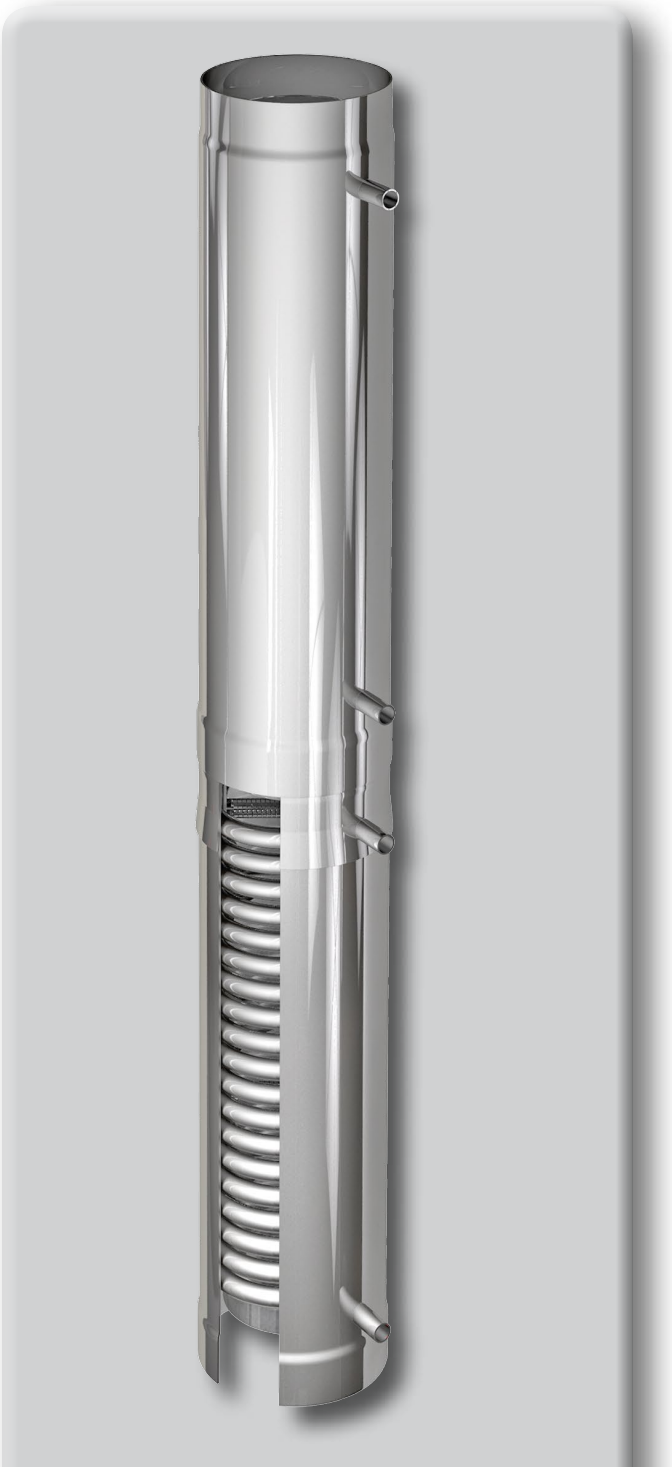

On the right:
Combination
(as an example
2 x TurbuFlexS 600)

TurbuFlexS-300 / Technical Data

Nominal diameter exhaust gas heat exchanger	200 mm
Total length of exhaust gas heat exchanger	470 mm
Length of coil heat exchanger approx.	ca. 300 mm
Heat exchanger surface approx.	ca. 0,3 m²
Heat exchanger capacity approx.	ca. 1 Liter
Flow and return connections, welding socket	½ inch
Material Stainless steel V4A, temperature stable and acid resistant*	1.4571
Guide plate unit with three guide plates, height	356 cm
Max. flue gas temperature	500 °C

TurbuFlex S-300		Flue gas temperature in °C							
		120	160	200	240	280	320	360	400
Firing capacity in kW	10	0,5	0,7	0,9	1,1	1,2	1,4	1,6	1,8
	20	0,7	1,0	1,2	1,4	1,7	1,9	2,2	2,4
	30	0,8	1,1	1,3	1,6	1,9	2,1	2,4	2,6
	40	0,8	1,1	1,4	1,6	1,9	2,2	2,5	2,7
	50	0,8	1,1	1,4	1,7	1,9	2,2	2,5	2,8
	60	0,8	1,1	1,4	1,7	1,9	2,2	2,5	2,8
	70	0,8	1,1	1,4	1,7	1,9	2,2	2,5	2,8
	80	0,8	1,1	1,4	1,7	1,9	2,2	2,5	2,8
	90	0,8	1,1	1,4	1,7	2,0	2,2	2,5	2,8
	100	0,8	1,1	1,4	1,7	2,0	2,2	2,5	2,8
		approx. heat output in kW							

TurbuFlexS-600 / Technical Data

Nominal diameter exhaust gas heat exchanger	200 mm
Total length of exhaust gas heat exchanger	770 mm
Length of coil heat exchanger approx.	ca. 600 mm
Heat exchanger surface approx.	ca. 0,6 m²
Heat exchanger capacity approx.	ca. 2 Liter
Flow and return connections, welding socket	½ inch
Material Stainless steel V4A, temperature stable and acid resistant*	1.4571
Guide plate unit with four guide plates, height	542 cm
Max. flue gas temperature	500 °C

TurbuFlex S-600		Flue gas temperature in °C							
		120	160	200	240	280	320	360	400
Firing capacity in kW	10	0,8	1,2	1,7	2,2	2,6	3,1	3,5	4,0
	20	1,3	2,0	2,7	3,5	4,2	4,9	5,6	6,4
	30	1,6	2,5	3,4	4,2	5,1	6,0	6,9	7,8
	40	1,8	2,7	3,7	4,7	5,7	6,7	7,7	8,7
	50	1,9	2,9	4,0	5,0	6,1	7,1	8,2	9,2
	60	1,9	3,0	4,1	5,2	6,3	7,4	8,5	9,6
	70	2,0	3,1	4,2	5,3	6,4	7,5	8,6	9,8
	80	2,0	3,1	4,2	5,4	6,5	7,6	8,7	9,9
	90	2,0	3,1	4,3	5,4	6,5	7,7	8,8	9,9
	100	2,0	3,2	4,3	5,4	6,6	7,7	8,8	10,0
		approx. heat output in kW							

TurbuFlexS-900 / Technical Data

Nominal diameter exhaust gas heat exchanger	200 mm
Total length of exhaust gas heat exchanger	1060 mm
Length of coil heat exchanger approx.	ca. 900 mm
Heat exchanger surface approx.	ca. 0,9 m²
Heat exchanger capacity approx.	ca. 3 Liter
Flow and return connections, welding socket	½ inch
Material Stainless steel V4A, temperature stable and acid resistant*	1.4571
Guide plate unit with three guide plates, height	844 cm
Max. flue gas temperature	500 °C

TurbuFlex S-900		Flue gas temperature in °C							
		120	160	200	240	280	320	360	400
Firing capacity in kW	10	0,8	1,3	1,8	2,4	2,9	3,4	3,9	4,4
	20	1,4	2,3	3,2	4,0	4,9	5,8	6,7	7,5
	30	1,8	3,0	4,1	5,3	6,4	7,5	8,7	9,8
	40	2,1	3,5	4,8	6,1	7,4	8,8	10,1	11,4
	50	2,4	3,8	5,3	6,7	8,2	9,7	11,1	12,6
	60	2,5	4,1	5,6	7,2	8,7	10,3	11,9	13,4
	70	2,6	4,2	5,9	7,5	9,1	10,8	12,4	14,0
	80	2,7	4,4	6,1	7,7	9,4	11,1	12,8	14,4
	90	2,8	4,5	6,2	7,9	9,6	11,3	13,0	14,7
	100	2,8	4,5	6,3	8,0	9,8	11,5	13,2	15,0
		approx. heat output in kW							

*Available on request: Other steel grades, paintwork, insula-tion, flange attachments, exhaust pipe adapter (reductions/extensions)

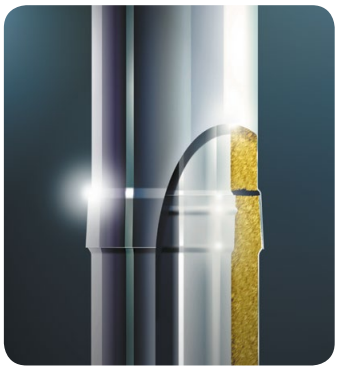

FUTURE DW
Double-walled chimney system for standard fireplaces in the over- and underfloor area Vacuum range. Insensitive to moisture, pressure-tight and as CHP line can be used.

FUTURE EW
Single-walled chimney system for standard fireplaces in the over- and underpressure range. Insensitive to moisture, pressure-tight and can be used as a CHP line.

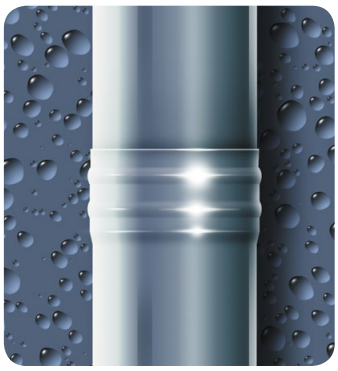

SANRO AQUA
The moisture-insensitive insert tube for all exhaust gas temperatures.

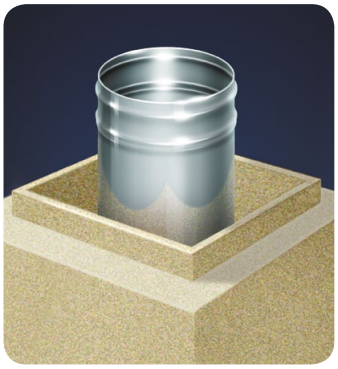

FUTURE THERM
Chimney system with shaft for all standard fireplaces for renovation and new construction.

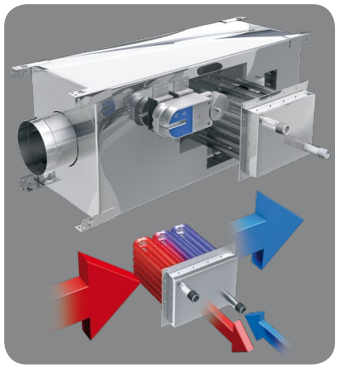

HEAT RECOVERY
Intelligent use of industrial waste heat

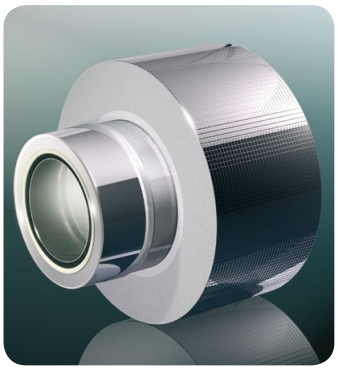

WALL DUCT
The safest way of wall ducting. Ideal for all drywall houses.

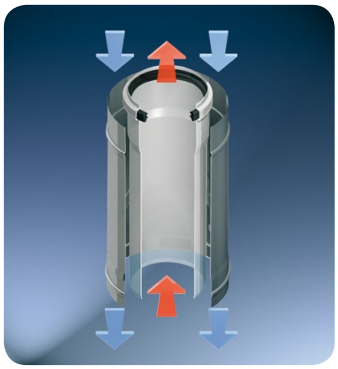

FUTURE PP
Plastic exhaust pipe for condensing and low temperature applications.

REDUCTION OF FINE DUST
Fine dust filter for wood firing systems in the power range up to 1.2 MW

The Schräder product range with special systems for individual requirements. Perfectly matched components guarantee optimum functionality and maximum efficiency for every requirement.

Quality has its origin.....

Only foresighted technology has a chance today. For Schräder, this means that even proven design methods have to be continuously further developed in order to enable functional and economical manufacturing processes.

It is clear that this demand can only be met with the highest demands on the material on which production is based. Schräder therefore only uses high-quality stainless steel VA for its components (material 1.4301, 1.4404, 1.4539, 1.4571, 1.4828). The fact that the 100% recyclability of this material also noticeably reduces the environmental impact has been part of our company philosophy for decades.

But only a continuous and effective quality control - in combination with modern technology, forward-looking Manufacturing methods and many years of experience in chimney technology - the manufactured product becomes a precisely fitting wheel component.

For this reason, the entire production process is subject to continuous monitoring in order to guarantee the end product an optimum service life.

It repeatedly shows:
QUALITY IS NOT A RESULT OF COINCIDENCE BUT RESULTS OF ACCURACY, SUSTAINABILITY AND INNOVATION!

in cooperation with
TurbuFlex
Abgaswärmeübertrager

K. Schräder Nachf. · Hemsack 11-13
59174 Kamen
Tel.: +49 (0)23 07 / 9 73 00-0
Fax: +49 (0)23 07 / 9 73 00-55
E-Mail: kamen@schraeder.com
www.schraeder.com

K. Schräder Nachf. · Neue Siedlung 1
04509 Schönwölkau · OT Badrina
Tel.: +49 (0)3 42 08 / 7 41-0
Fax: +49 (0)3 42 08 / 7 41-19
E-Mail: badrina@schraeder.com

SCHRÄDER
ABGASTECHNOLOGIE